Operating and installation guide for the digital instrument

motoscope tiny / speedster / vintage

Suchen Sie die deutsche Bedienungsanleitung?
Besuchen Sie: www.motogadget.de/de/mst_files.html

ABE
KBA 91260

Thank you very much for purchasing a high quality product by *motogadget*.

Please read the following information and recommendations thoroughly and follow these instructions during installation and use of the instrument. No liability is assumed by *motogadget* for damage or defects resulting from negligence or failure to follow the operating and installation guide.

CAUTION FOR ALL U.S. CUSTOMERS

THIS PRODUCT IS NOT D.O.T. APPROVED AND INTENDED FOR SHOW USE ONLY!

CAUTION: IF YOU ARE NOT A CERTIFIED MOTORCYCLE TECHNICIAN PLEASE STOP HERE AND ASK YOUR LOCAL MOTORCYCLE SHOP FOR PROFESSIONAL INSTALLATION!

Do you need further product information's, outside dimensions, 2D or 3D drawings? Please visit:

www.motogadget.de/en/mst_files.html

Contact:

motogadget GmbH
Köpenicker Str. 145
D - 10997 Berlin
Germany

Tel. 030-27 59 19 20
Fax 030-27 59 19 22

www.motogadget.com
info@motogadget.de

Version 1.5

© Copyright by motogadget, Berlin 2008-2011
motoscope and motogadget are registrated trademarks of motogadget GmbH, Berlin, Germany

1 Review of delivery

All products from *motogadget* are thoroughl ecked to ensure they are completely fault free when dispatched. Please check the received goods immediately for possible transport damage. If you find any damage or other deficiencies, please contact us immediately.
In this regard we refer to our general terms of business and delivery, which are published under www.*motogadget*.com. Should a return of the received delivery be agreed, please note that we only take back goods in their original packaging. The instrument and its accessories must be returned within the legal period of time and without any traces of use. We do not assume any liability for returns which are insufficiently insured or packed.

2 Exclusion of liability

INSTRUMENT HOUSINGS AND ALL OTHER DELIVERED PARTS MUST NOT BE OPENED OR DISMANTLED. IN CASE OF NON-COMPLIANCE ALL GUARANTEE CLAIMS BECOME INVALID. THE USE OF THE DELIVERED INSTRUMENTS, SENSORS AND ACCESSORY PARTS FOR RACING OR OTHER COMPETITIONS, AS WELL AS ALL USES THAT DO NOT CORRESPOND TO THE RECOMMENDED APPLICATION RENDER ALL GUARANTEE CLAIMS INVALID. MOTOGADGET ACCEPTS NO LIABILITY FOR DIRECT OR INDIRECT DAMAGE OR SUBSEQUENT DAMAGE OF ANY KIND RESULTING FROM THE USE, INSTALLATION OR CONNECTION OF INSTRUMENTS, THE SENSORS OR OTHER DELIVERED EQUIPMENT. THIS EXCLUSION OF LIABILITY PARTICULARLY INCLUDES DAMAGE TO PERSONS, MATERIAL LOSSES AND FINANCIAL DAMAGES. THE USE IN AREAS OF PUBLIC TRAFFIC IS UNDERTAKEN AT THE USER'S OWN RISK.

THE INSTRUMENT CONTAIN MOVABLE, MECHANICAL PARTS. THE DEVICE IS NOT SUITABLE FOR A DIRECT MOUNTING ON EXTREM HOT OR VIBRATING PARTS LIKE A ENGINE ROCKERBOX. DAMAGES RESULTING FROM HEAT OR EXTREME VIBRATIONS RENDER ALL GUARANTEE CLAIMS INVALID.

2.1 Duty of registration

The *motoscope tiny / speedster / vintage* has a General Operating Permit (ABE) and therefore does not have to be entered into the vehicle documents. The device is identifiable as having a General Operating Permit by a special label with the code "KBA 91260" on the back side of the device.

THE GENERAL OPERATING PERMIT (ABE) IS ONLY VALID WHEN THE DEVICE IS INSTALLED IN TWO- OR THREE-WHEELED VEHICLES AND THE WHEEL CIRCUMFERENCE WHICH HAS BEEN ENTERED INTO SETUP CORRESPONDS TO THE ROLLING TIRE CIRCUMFERENCE GIVEN (TABLE IN APPENDIX).

THE USER IS PERSONALLY RESPONSIBLE FOR CORRECT CALCULATIONS AND ADJUSTMENTS CONCERNING TIRE CIRCUMFERENCE, IMPULSES PER WHEEL ROTATION AND CORRECT INSTALLATION OF THE SPEEDOMETER SENSOR.

3 Technical data and functions

diameter / height	49 mm / 31 mm
weight including cable	ca. 90 g
threaded fastening bores	2 x M3, 4 mm deep
operating voltage	9 -15 V
current consumption	max. 200 mA
stand-by current	400 µA
operating temperature	-20 - +80 ℃

4 Preparation for installing and connecting the instrument

4.1 Required knowledge and abilities

Installing and connecting the *motoscope tiny* requires no special knowledge or abilities. The device can be installed on a wide range of different vehicles with different specifications and equipment. For this reason it is not possible to cover all special cases within this description. In cases of doubt, please consult the information supplied on our website. A second possibility is an installation in a professional shop.

4.2 Required materials for installing and connecting the instrument

Since the motoscope tiny is suitable for a variety of vehicles, **additional materials** might be necessary in order to mount the instrument to an individual vehicle. Such materials can include:

- mounting bracket for the instrument and fitting screws for the bracket
- mounting bracket for the speedometer sensor
- cables or cable extensions for voltage-supply, ignition-signal and idle gear connection
- assembly materials such as cable ties, plug connectors, shrink hose, soldering iron, solder etc.

The use of the original vehicle wiring diagram is recommended.

If your vehicle is not equipped with a three wire speedometer sensor which provides a output voltage higher than +5V, the use of the delivered motogadget speedometer sensor is necessary.

In case you do not use the motogadget mounting accessories, you have to make your own mounting bracket. If the motogadget speedometer sensor will be applied, you have to make your own sensor mounting bracket, or order the motogadget part (part number 3004099).

5 Quick start

This section provides a guide to quick installation and connection of the SureShift

a) Make sure that you have all necessary materials and tools available before starting the installation. Such materials are: an instrument mounting bracket, fitting screws, cables, cable ties, plug connectors, shrink-hoses and soldering tin. Necessary tools are: screwdrivers, wrenches, Allen key for M3 metric screws, side cutter, small pliers, soldering iron, a voltage indicator and a crimping tool.

b) Have the vehicles wiring scheme and *motoscope tiny* connection plan ready

c) Install the instrument mounting braked and instrument. If necessary install the speedometer sensor mounting bracket and speedometer sensor.

d) Choose a suitable position for splicing all connections of instrument, menue push button, speedometer sensor and indicator light connection cables. Consider to have additional space for the connector assembly.

e) Locate switched +12V on the wiring harness of the vehicle by using a circuit analyzer. Switched plus” means current must not flow until electric power is switched “on”. Furthermore laying a wire from +12V terminal of your battery directly to the place of connection. Make sure these both connection wires are fused with a 5A fuse each nearest possible to the battery.

f) Remove the ground cable from battery terminal.

g) Route all cables from instrument, voltage supply, the speed sensor, menue push button and indicator lights to their chosen location. Then connect the cables according to the circuit diagram provided in the appendix.

h) Re-connect the vehicle battery and turn the voltage supply “on”

i) Navigate to the setup menu (see Chapter 11) and adjust all necessary parameters.

6 General safety instructions

- For safety reasons the vehicle **battery must be disconnected** prior to the installation.
- Take particular care that all delivered parts are fastened securely to your vehicle. This is important for your own and other peoples’ safety.
- Make sure that your vehicle is equipped with **interference suppressing spark plugs and connector cables!**

  Use of the *motoscope tiny* with non-suppressed ignition systems can lead to serious damage to the device!

7 Installation of the instrument

To ensure correct fastening two metric fastening screws must be used (M3). In order to avoid distortions of the threaded bores, the fastening bolts must be screwed into the instrument housing to a minimum depth of 3 mm and a maximum depth of 5 mm. It is therefore important to select screws appropriate to the thickness of the used mounting bracket. We also recommend the use of additional washers and screw adhesive (e.g. Loctite medium-strength). Furthermore, the **maximum torque** applied to the M3 fastening screws must not exceed **4 Nm**.

8 Connecting

8.1 Cable routing recommendations

Before routing cables look for suitable cable paths. The cables should be as far away as possible from hot parts of the engine. Look for a suitable place for the respective cables to meet with their plugs and for the plugs to be connected with one another. This is usually in the headlight housing or somewhere below the gas tank. Make sure you take note of the required lengths of cables before cutting them for best fit. It is important here to consider the full lock of the handlebars as well as the front and rear wheel travel. All cables should be routed free of kinks and should not be subject to any tension. In addition, the cables have to be properly isolated, especially in places where mechanical wear can take place. We recommend solder joints. For fastening the cables we recommend cable ties of synthetic material.

8.1.1 Cable colours, functions, and connections

Cable colour	Function	Connection
red	Power supply	Continuous (+) fused with a 5A fuse
black	Power supply	Vehicle earth
brown	Input ignition lock	Switched plus (+) fused with a 5A fuse
orange	Input speedometer sensor	Lead to the signal wire of the OEM speedometer sensor or to the motogadget speedometer sensor which is switching to +12V
green	Input menu push button	Lead to the menu push button which is switching to vehicle earth
blue	Input high beam indicator lamp	Lead to the high beam indicator light's plus terminal or directly to High beam bulb connection
white	Input idle gear indicator lamp	Lead to the idle gear switch which is switching to earth
purple	Input warning lamp	Lead to the positive connection of the warning light or i.e. directly the oil pressure switch which is switching to earth
yellow	Input turn signal indicator lamp	Lead to the positive connection of the turning signal indicator light or directly to the turn signals (see connection in appendix)

8.2 Battery and voltage supply

The *motoscope tiny require* supply voltage from 9V to 15V. Operating the instrument without a vehicle battery is not possible. Please ensure that the polarity of the voltage supply is correct.

ATTENTION! THE MINIMAL SUPPLY CABLE WIDTH IS 0,75MM². YOU MUST FUSE THE +12V POWER SUPPLY CABLE WITH A 5A FUSE. IF DEVICE WILL BE USE WITHOUT FUSE, DAMAGE AT THE CONNECTING CABLE OR THE SURESHIFT ITSELF CAN CAUSE A SHORTCUT AND A CABLE FIRE. THERE MAY BE RISK OF YOUR LIFE! MAKE SURE YOU ARE CAPABLE TO CONNECT THE INSTRUMENT PROPERLY. IF YOU ARE NOT SURE, LET THE SHOP DO THE JOB!

8.5 Installation and connection of the speedometer sensor

8.5.1 Use of the vehicles OEM speedometer sensor

If your vehicle comes with a three wire OEM speedometer sensor which provides an output signal higher than +5V you may use the sensor with the *motoscope tiny*. Please advice our technical database if your sensor is compatible.

A hall sensor (two connection wires) is not compatible with the *motoscope tiny*.

Connect Speedometer sensors signal cable with *motoscope tiny's* orange connection cable. Further connect the delivered load resistor between OEM speed sensors supply voltage and signal cable. If you don't get a speed signal, your OEM sensor is not compatible with the device. In this case you have to use the motogadget speedometer sensor.

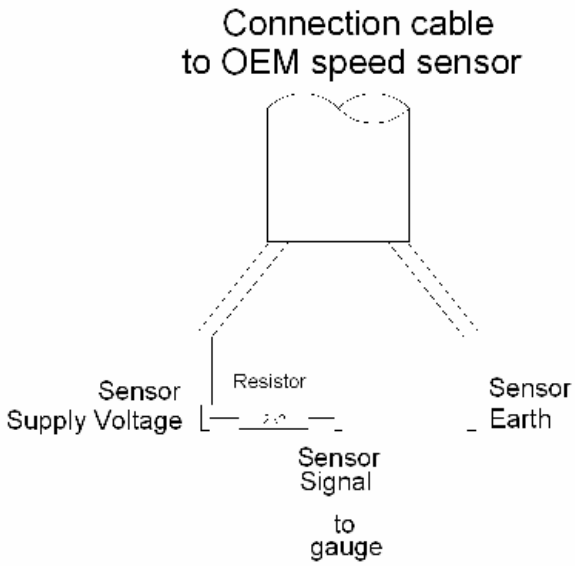

8.5.2 Use of the motogadget speedometer sensor

The motogadget speedometer sensor is a reed sensor.

For signal triggering the delivered magnet must be attached to one wheel by using 2k epoxy glue. It doesn’t matter where the magnet will be attached (close to the centre or far from the centre). Nevertheless we suggest placing the magnet close to the centre.

The speedometer sensor has to be mounted to the vehicle by using a self made holding bracket. The sensor tip has to be fastened parallel to the magnet's surface. The gap between the magnet and the sensor must not exceed 4 mm and the sensor must not touch the magnet or any other rotating parts. The sensor holding bracket has to be made sufficiently stable in order to prevent any distance changes during any driving situations. The maximum mounting torque of the sensor nuts is 2 Nm. For secure mounting we recommend to use screw adhesive (medium strength). Subsequently, connect one cable of the speedometer sensor with +12 V ("switched plus") and the other one with the orange cable of the *motoscope tiny*. Polarity is not relevant.

ATTENTION! IF ONE END OF THE DELIVERED SPEEDOMETER SENSOR IS CONNECTED WITH +12V AND THE OTHER OPEN END TOUCHING VEHICLE EARTH ACCIDENTALLY, THE SENSOR WILL BE DESTROYED. THE MAGNET WILL BE DEFECTIVE IF IT IS EXPOSED TEMPERATURES HIGHER THAN 100℃ OR 212℉ (I.E. HOT B RAKES).

9 Putting the instrument into the initial operation phase

Once all parts are installed securely and all cables are connected properly reconnect the battery and switch on the voltage supply. If the electrical connection is correct, the pointer will move to the end of the dial and back. The LED display will light up. If this doesn't happen, turn off the ignition immediately and recheck all connection terminals and cables on the instrument systematically.

10 Operation and use of the instrument

All functions of the instrument are activated using only one pushbutton. Press the button for different times provides access to different levels of the display and the setup menu. The system distinguishes between three times stages.

Stage 1: < 1 sec	primarily selection of the next option or setting a number read-out.
Stage 2: 1 sec – 3 sec	primarily selection of the next/subordinate level or selection of the next digit. Deletion of stored values.
Stage 3: > 3 sec	primarily selection of the previous/primary level or leaving the menu item.

Please find the exact sequences for the setup menu in the flow chart (appendix 15.3).

11 Functions

The vehicle speed is displayed by the pointer in km/h or mph. If the pointer reaches 180 on the dial, the speed will additionally displayed at the LED display. Therefore it is possible to display speed beyond the dial limit of 200 km/h or mph. Furthermore all other information’s like clock; trip; odometer, maximum speed and on-board voltage are displayed at the LED display.

11.1 Clock

Menu „hour“ provides the clock time in 24 hour format. Condition is the connection of the *motoscope tiny's* red cable to continuous +12V. This cable must fuse with a 5A fuse.

11.2 Odometer (km or ml)

The odometer shows the amount of kilometres or miles since starting the instrument. This value can be adjusted or set to zero the setup menu's level „SET ODO“.

11.3 Trip counter (km or ml)

The current trip milage is displayed in menu „Trip“. The trip counter differ form the odometer by a decimal place. The milage is shown between 0 – 999.9 km or ml. After reaching the 999.9 the counter starts again from 0. To reset the trip value, hold the menu button until the display sets to zero.

11.4 Maximum speed (km/h or mph)

The maximal reached speed is displayed in menu „Top Speed“. The reset the value, hold the push button until the display sets to zero.

11.5 On-board voltage

The on-board voltage is displayed in menu “batt”.

12 Setup

All operations, adjustments, and calibrations of the *motoscope tiny* are carried out using a single pushbutton. For this reason the internal design of the setup is laid out in logical levels. The selection of and access to these levels as well as to their sub-points is controlled using different button compression times. The different times are represented visually by the illumination of the first two indicator lights.

In order to enter the setup menu the pushbutton has to be engaged until "**Setup**" appears in the display. Now a short push button operation (one indicator light is illuminated) will navigate trough the setup main menu. Al long push button operation (two indicator light are illuminated) will activate the displayed menu. The setup operation overview is shown in chapter 15.3.

12.1 Menu 1 – Clock setup (SET hour)

A short push button operation (one indicator light is illuminated) increases hour or minute. A long push button operation (two indicator lights are illuminated) change between hour and minute setup. If the push button is hold for some seconds, the display will be switch back to the setup main menu.

12.2 Menu 2 – Odometer setup (SET ODO)

If you like to take the vehicles milage form the old speedometer to the motoscope tiny you can setup this value. A short push button operation (one indicator light is illuminated) increases the chosen digit. . A long push button operation (two indicator lights are illuminated) change between the digits. If the push button is hold for some seconds, the display will be switch back to the setup main menu.

12.3 Menu 3 – Set impulse per wheel revolution (SET PULSE)

In this menu you can set the amount of speedometer senor impulses per wheel revolution. There is no need for adjustments if using the motogadget speedometer senor with one magnet. If you use more than one magnet the amount of magnets has to be adjusted. If using an OEM speedometer sensor, set the amount auf output pulses per wheel revolution. A short push button operation (one indicator light is illuminated) increases the chosen digit. A long push button operation (two indicator lights are illuminated) change between the digits.

If the push button is hold for some seconds, the display will be switch back to the setup main menu.

If the function TEACH is used there no need to adjust something in this menu.

12.4 Menu 4 – Set wheel circumference (SET CIRC)

The value Circ represents the circumference of the wheel in mm to which the magnet and the speedometer sensor is attached to.

Measure the wheel circumference, e.g. with the aid of a flexible wire or a cord. Subsequently, add a speedometer advance of 5% by multiplying the measured value by 1.05. A short push button operation (one indicator light is illuminated) increases the chosen digit. A long push button operation (two indicator lights are illuminated) change between the digits. If the push button is hold for some seconds, the display will be switch back to the setup main menu.

If the function TEACH is used there no need to adjust something in this menu.

12.5 Menue 5 – Speed sensor teach - in (TEACH)

The sub-point **Teach** affords an automatic calibration of the speedometer. To use this function, the vehicle must be driven constantly at exactly 50 km/h (31 mph) while a 5 second countdown elapses. Start the teaching by a long push button operation (two indicator lights are illuminated). The device stores the calculated values and returns to the standard display.

The resulting accuracy is depending from the reference speed accuracy during the teach count-down. This fact may cause a inaccurate speed display if the reference speed of 50km/h (31mph) is not hold exactly during the teach-in. Therefore the use of the conventional method (set pulse and circumference) is recommended.

12.6 Menu 6 – Set unit (UNIT)

Within this function the display indication can be changed from kilometres to miles by pressing the push button for a short time. The character “0” is standing for kilometres and character “1” for miles. To leave the sub-point; engage the push button until the setup main menu appears.

12.7 Menue 7 – Show number of software version (STAND)

This point shows the current software version. Nothing can be adjusted. Leave this sub-menu engaging the push button until the setup main menu appears..

13 Safety instructions

The *motoscope tiny* provide a lot of information at one time. Users consequently require a certain "training" period in order to recognise all the given information quickly and correctly. Please do not distract yourself by watching the instrument in public traffic. The user of the instrument is responsible for the correct entry of all relevant data as well as for the adjustment of the speedometer and all other functions. In particular, the fitting of the dry reed contact as well as the input of all calculation factors for speed determination must do with great care. The user is also responsible for mounting the instrument, the sensors, and all other accessory parts to the vehicle correctly and securely.

DO NOT OPERATE THE INSTRUMENT WHILE DRIVING! THIS MAY CAUSE LOOSING CONTROL OVER THE VEHICLE AND WILL RESULT TO A ACCIDENT WITH SERIOUS INJURIES OR DEATH.

14 Trouble shooting

14.1 After the installation

- Make sure the supply voltage is minimum 9V. Check the vehicles battery.
- Do not use a battery charger to test the Instrument.
- Check all cables for correct installation and contact.
- Check all cables, for correct polarities and short-circuits.

- **Defective Instrument? So you can check instruments inputs and functions by yourself:**
  - disconnect all wires from vehicle wiring loom
  - connect only +12V to the brown cable and Earth to the black cable
  - now the display must be illuminated and the Pointer should move to the end of the dial and back. If not check the power source and cables for polarity.
  - inch the orange cable to +12V – if the pointer is moving slightly, this input is working correctly
  - inch the green cable to earth – if the LED display shows different values, this input is working correctly
  - inch the blue cable to +12V – if the high beam indicator light is illuminated, this input is working correctly
  - inch the yellow cable to +12V – if the turn signal indicator light is illuminated, this input is working correctly
  - inch the white cable to earth – if the idle gear indicator light is illuminated, this input is working correctly
  - inch the purple cable to earth – if the warning indicator light is illuminated, this input is working correctly
  - If this test was successful, the instrument is working correctly - check your connections to the vehicle. If the test was not successful you have to return the instrument for change

15.2 Return and complains

If you like to return a defective instrument for repair or change please observes following issues:

- Make sure again there is no connection failure. In doubt use a different voltage source to recheck.
- Not prepaid shipments will be rejected.
- The Shipment to motogadget is carried out by your own risk - you are responsible for a sufficient insurance.
- Make sure the package is adequate.
- Attach the invoice and a failure description with Motorcycle model and year.
- If you are located outside the EU, you have to declare “repair item” and value 1 Euro in shipment custom declaration.

The *motogadget* team wishes you pleasant and safe riding and lots of fun with your new *motoscope tiny*.

15 Appendix

15.1 Connection Scheme

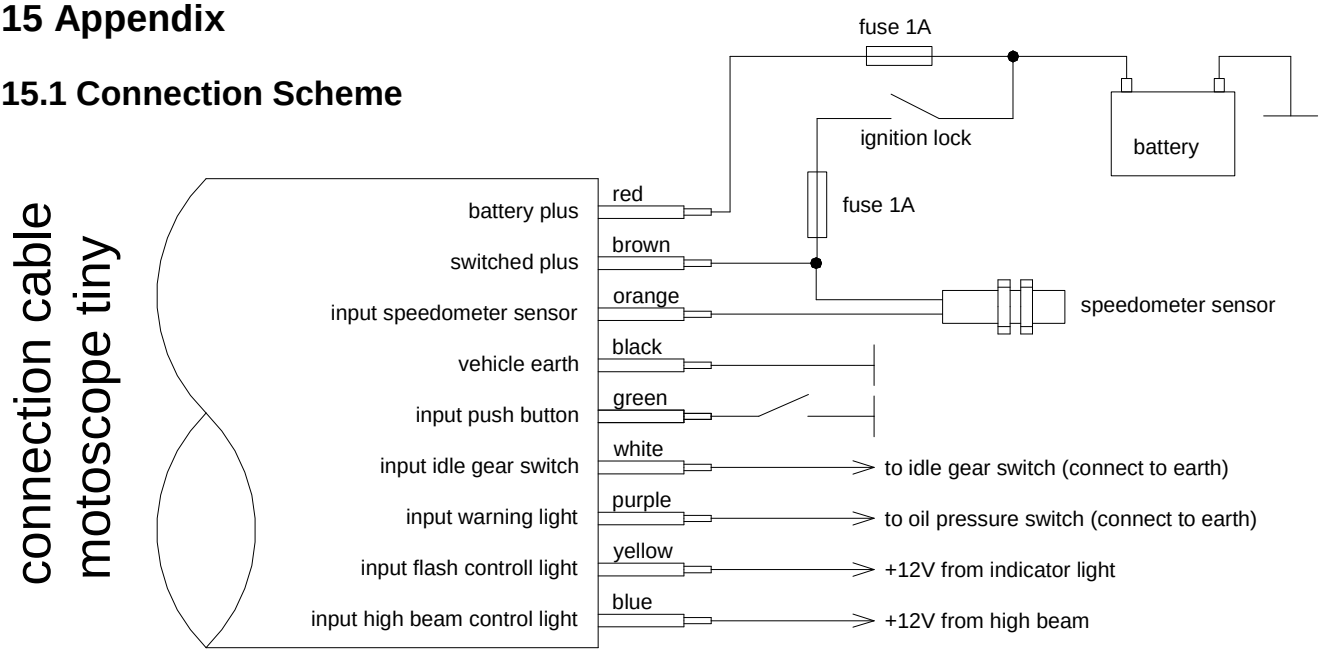

15.2 Joining of two turn signal indicator lights

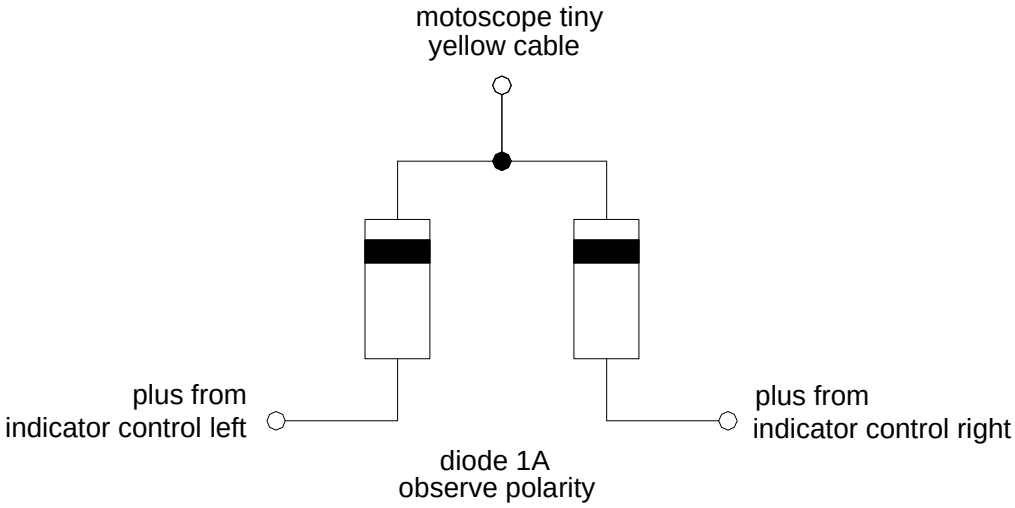

15.3 General overview of operation

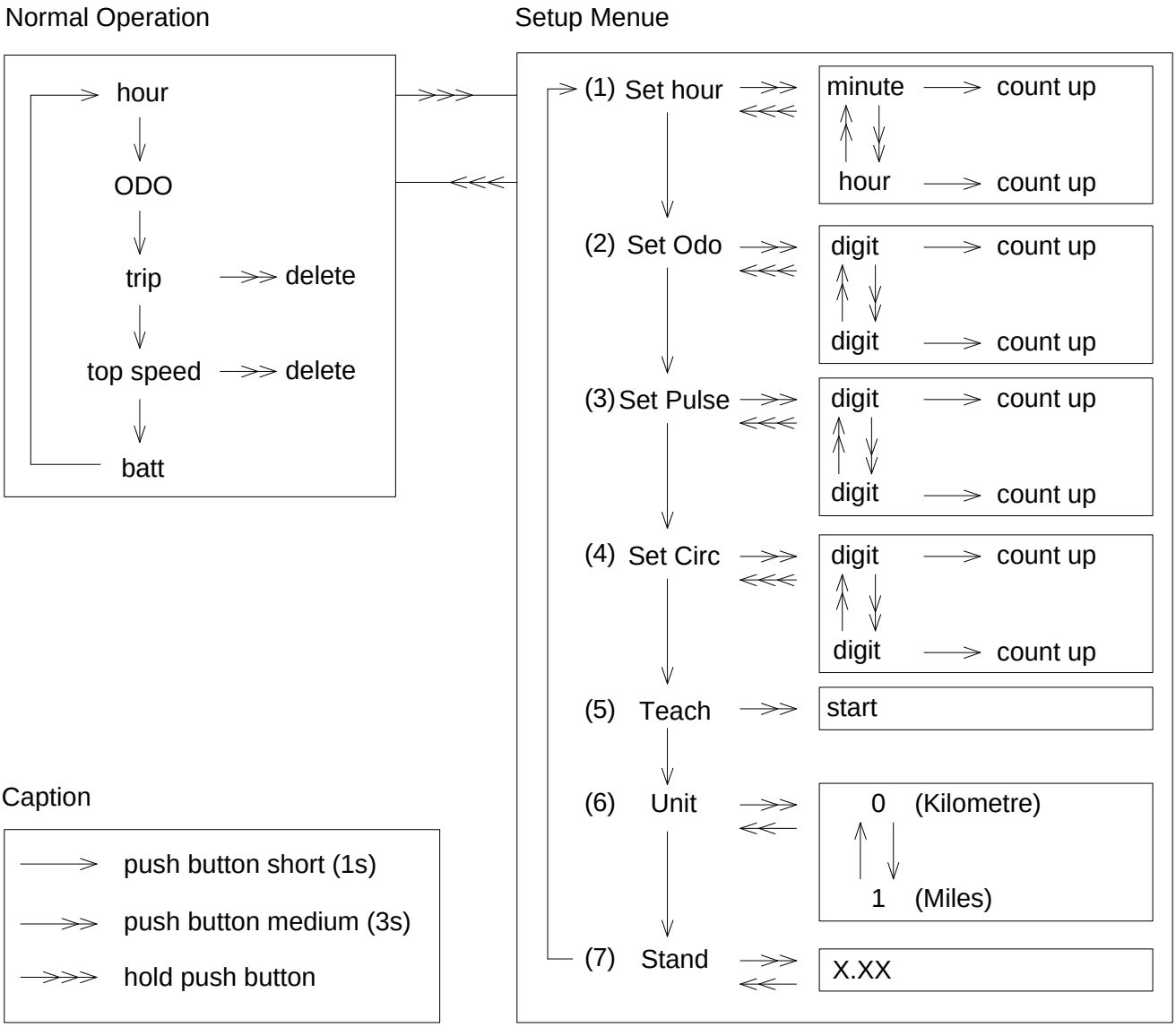

15.4 Table of tire circumferences

Zoll Inch	Reifendimension Tyre Size	Abrollumfang für ABE / Gutachten
16	100/90 16	1770
16	110/90 16	1824
16	120/80 16	1806
16	120/90 16	1878
16	130/70 16	1776
16	130/90 16	1933
16	150/80 16	1951
16	140/90 16	1987
16	150/80 16	1951
16	160/80 16	1999
16	180/60 16	1878
16	180/70 16	1987
16	200/60 16	1924
16	240/50 16	1951
17	100/80 17	1788
17	110/70 17 54 H TL	1770
17	110/70 V 17 V 250(54V) TL	1770
17	110/70 V 17 V250 (54V) TL	1770
17	110/70 ZR 17 54 W TL	1770
17	110/80 - 17 57 H TL	1836
17	110/80 -17 57 H TL	1836
17	120/60 ZR 17 (55W) TL	1740
17	120/70 - 17 58 V TL	1812
17	120/70 B 17 M/C 58 V TL	1812
17	120/70 ZR 17 (58W) TL	1812
17	120/80 - 17 61 H	1884
17	120/80 - 17 M/C 67H reinf.	1884
17	120/80 -17 M/C 67H reinf. TL	1884
17	120/90 - 17 rear	1957
17	130/60 ZR 17 59W TL	1776
17	130/70 17 62 H TL	1854
17	130/70 ZR 17 62W TL	1854
17	130/80 - 17 65 H TL	1933
17	130/80 - 17 65 H TL	1933
17	130/80 - 17 65 S	1933
17	140/80 - 17 69 H	1981
17	140/80 - B 17 M/C 69 H TL	1981
17	140/80 B 17 M/C 69H TL	1981
17	150/60 ZR 17 66W TL	1848
17	150/70 17 69 H TL	1939
17	150/70 17 69 V TL	1939
17	150/70 R 17 69 H TL	1939
17	150/70 ZR 17 (69W) TL	1939
17	150/80 17	2029
17	160/60 VB 17 (69V) TL	1884
17	160/60 ZR 17 (69W) TL	1884
17	160/70 B 17 73 V TL	1884
17	160/70 ZR 17 73 W TL	1884
17	170/60 VB 17(72V) TL	1921
17	170/60 ZR 17 (72W) TL	1921
17	180/55 ZR 17 (73W) TL	1903
17	180/55 ZR 17 V300 (73W) TL	1903
17	190/50 ZR 17 (73W)TL	1878
17	200/50 ZR 17 (75W) TL	1919

Zoll Inch	Reifendimension Tyre Size	Abrollumfang für ABE / Gutachten
18	90/90 - 18 51 H TL	1869
18	100/90 - 18 56 H	1924
18	100/90 - 18 56 H TL	1924
18	100/90 - 18 61 H TL	1924
18	100/90 - 18 M/C 61 H TL	1924
18	110/80 - 18 58 H TL	1912
18	110/80 - 18 58 H TL	1912
18	110/80 - 18 M/C 58 S	1912
18	110/90 18	1978
18	110/100 18	2099
18	120/70 ZR 18 59W TL	1888
18	120/80 - 18 62 H TL	1960
18	120/80 - 18 62 S	1960
18	120/90 - 18 65 H TT/TL	2032
18	120/90 - 18 M/C 61 H TL	2032
18	130/70 18 63 H TL	1930
18	130/70 B 18 69 H reinf. TL	1930
18	130/80 18	2008
18	140/80 - 18 70 R	2057
18	150/70 VB 18 TL	2014
18	160/60 VB 18 V280 (70V) TL	1960
18	160/60 ZR 18 (70W) TL	1960
18	170/60 VB 18 V280 (73V) TL	1996
18	170/60 ZR 18 (73W) TL	1996
18	180/55 18	1981
18	200/50 18	1951
18	240/40 18	1960
18	3.00 - 18 47 S	1894
18	3.00 - 18 52 M reinf.	1894
18	3.00 - 18 52 P reinf.	1894
18	3.25 - 18 52 H	1930
18	3.25 - 18 52 S	1930
18	3.25 - 18 59 P reinf.	1930
18	3.25 - 18 59 P reinf.	1930
18	3.50 - 18 56 S	1960
18	3.50 - 18 62 P reinf.	1960
18	3.50 - 18 62 P reinf.	1960
19	100/90 - 19 57 H TT/TL	2002
19	110/90 - 19 62 H TL	2057
19	110/90 19 57 S TL	2057
19	3.00 - 19 49 S	1972
19	3.00 - 19 54 P reinf.	1972
19	3.25 - 19 54 H TT/TL	2008
19	3.25 - 19 54 P	2008
19	3.25 - 19 54 S TT/TL	2008
19	3.25 - 19 54 V TL	2008
19	3.50 - 19 57 H TT/TL	2038
19	3.50 - 19 57 P	2038
19	3.50 - 19 57 S TL	2038
19	3.50 - 19 57 V TT/TL	2038
21	80/90 - 21 48 H	2045
21	80/90 - 21 54 H TL	2045
21	90/90 - 21 54 S	2099